FIRE STOP

PROTECTING LIFE & PROPERTY

Acoustic Seals for Fire Doors

Made in the UK • Distributed Globally

Acoustic drop down seals

Sound Fire Smoke Air DDA Light

Description

A comprehensive range of high performance seals designed to meet the needs of approved document E. Firestop offer a high quality range of acoustic drop down seals for the bottom of doors known as ‘dropseals’.

The seals are activated by the closing action of the door, dropping down to seal only when the door is closed. This leaves the door threshold clear and flat, without the need for high fixed thresholds. Our seals have been tested with and without threshold plates and also straight down to carpet.

These Seals are designed to form an effective barrier against the outside climate, noise, light, fire, smoke and insects. They provide a cost-effective solution for document part E and part M of the latest UK building regulations relating to disability, access and energy conservation.

There are a choice of seals to suit glass and timber doors. All seals are available in a wide choice of standard sizes, and are easily fitted. Just cut the seal down to the door width, attach to the door using the pre-fitted screws, and adjust the drop down seal for a tight fit to the floor with the 3 mm Allen key screw located in the plunger cap. There is a selfaligning cap on the end of the plunger.

Our rebated models have easily removed mechanisms to prevent damage during installation. This also assists in removing the rubber seal in case of accidental damage.

Simply slide the rubber seal/mechanism out from the plunger side and replace as necessary. The fixing screws must be fully screwed home or taken out to allow the mechanism to be removed.

Product testing and quality control are very important to us. All our seals have been endurance-tested to 200.000 cycles. Our comprehensive range of acoustic testing is available upon request.

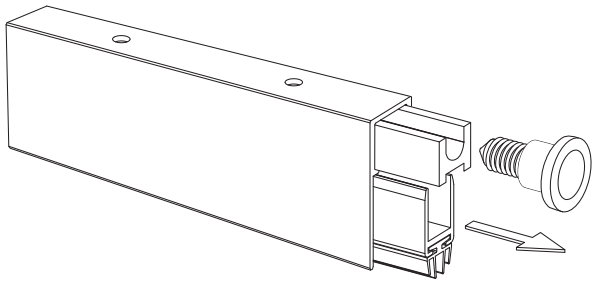

Features and Benefits

- Designed to work with up to a 14mm gap between the door and floor
- European manufactured
- Simple cost effective installation
- Tested with and without threshold plates
- Tested straight down to carpet
- Quality products you can trust and depend on

Key: symbols for product feature qualities

Sound Fire Smoke Air DDA Light

t 01305 257 428 e sales@firestopltd.co.uk w firestopltd.co.uk

Top 37

Sound Fire Smoke Air DDA Light

Rebated model for timber doors
Acoustically tested achieving up to **37dB Rw**

Features and Benefits

- Prefitted screws for quick cost effective fixing
- Seal drops on hinge side before lock side
- Seal removable to assist installation/replacement
- 14 mm maximum drop
- Galvanized steel flat springs and reinforced actuators
- 2 fin high quality 'V' zero class PVC rubber coextruded seal and carrier, self extinguishing, in aluminium body

Acoustic Performance and Fire Testing

Acoustic testing undertaken in accordance with BS EN ISO 140-3:1995 achieving a rating of up to 37dB Rw

Fire tested to BS476: Part 20/22: 1987 to 60 minutes

Smoke tested to BS EN 1634-3: 2004

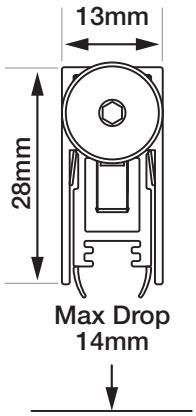

Code	Length	Description	Maximum Trimmed Length	Pack Outers
FS1200	330mm	Top 37dB Drop Down Seal	280mm	5
FS1201	430mm	Top 37dB Drop Down Seal	305mm	5
FS1202	530mm	Top 37dB Drop Down Seal	430mm	5
FS1203	630mm	Top 37dB Drop Down Seal	530mm	5
FS1204	730mm	Top 37dB Drop Down Seal	630mm	5
FS1205	830mm	Top 37dB Drop Down Seal	730mm	5
FS1206	930mm	Top 37dB Drop Down Seal	830mm	5
FS1207	1030mm	Top 37dB Drop Down Seal	930mm	5
FS1208	1130mm	Top 37dB Drop Down Seal	1030mm	5
FS1209	1230mm	Top 37dB Drop Down Seal	1130mm	5
FS999		End caps to suit Top drop down seals		5

Acoustic Plus 51

Sound Fire Smoke Air DDA Light

Rebated model for timber doors
Acoustically tested achieving up to **51dB Rw**

Features and Benefits

- Maximum trimming length: 150 mm
- Prefitted screws for quick cost effective fixing
- Seal drops on hinge side before lock side
- Seal removable to assist installation/replacement
- 14 mm maximum drop
- Galvanized steel flat springs and reinforced actuators
- Sound insulating seal, high quality 'V' zero class PVC rubber, self extinguishing, in aluminium body

Acoustic Performance and Fire Testing

Acoustic testing undertaken in accordance with BS EN ISO 140-3:1995 and DIN EN 20 140 type test as per DIN 52210-03 achieving a rating of up to 51dB Rw

Fire tested to BS476: Part 20/22: 1987 to 60 minutes

Smoke tested to BS EN 1634-3: 2004

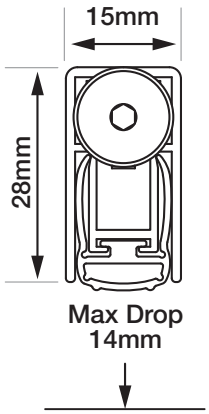

Code	Length	Description	Maximum Trimmed Length	Pack Outers
FS1218	330mm	Acoustic Plus 51dB Drop Down Seal	280mm	5
FS1219	430mm	Acoustic Plus 51dB Drop Down Seal	295mm	5
FS1220	530mm	Acoustic Plus 51dB Drop Down Seal	380mm	5
FS1221	630mm	Acoustic Plus 51dB Drop Down Seal	480mm	5
FS1222	730mm	Acoustic Plus 51dB Drop Down Seal	580mm	5
FS1223	830mm	Acoustic Plus 51dB Drop Down Seal	680mm	5
FS1224	930mm	Acoustic Plus 51dB Drop Down Seal	780mm	5
FS1225	1030mm	Acoustic Plus 51dB Drop Down Seal	880mm	5
FS1226	1130mm	Acoustic Plus 51dB Drop Down Seal	980mm	5
FS1227	1230mm	Acoustic Plus 51dB Drop Down Seal	1080mm	5
FS999		End caps to suit Acoustic Plus Drop Down Seal		5
Special sizes available to order: 1330mm-1430mm-1530mm-1630mm-1730mm-1830mm				

Flash

Sound Fire Smoke Air DDA Light

Designed to work with Acoustic Plus drop down seals - for double leaf timber door sets
Acoustically tested achieving up to **35dB Rw**

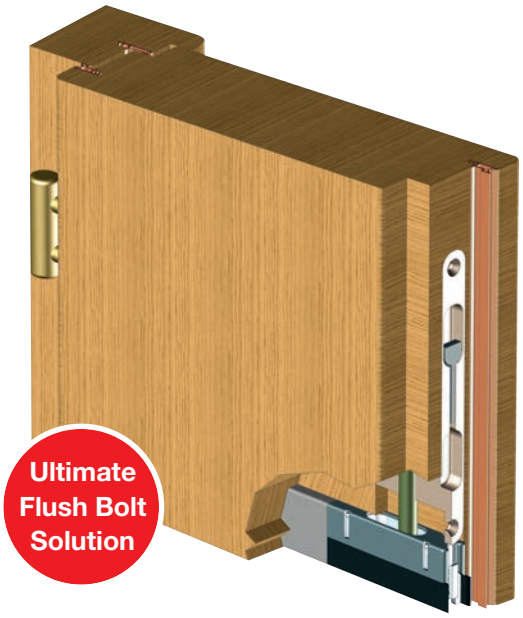

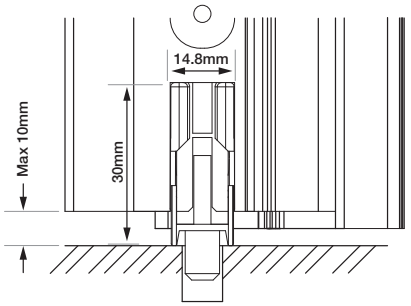

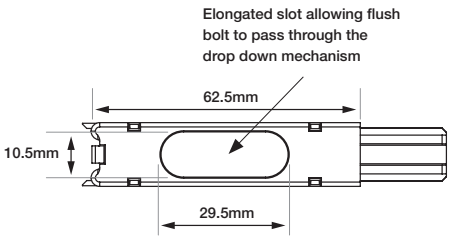

A unique solution to fitting rebated flush bolts in conjunction with drop down seals. The patented Flash seal works as an extension element exclusively with the Acoustic Plus 51 Drop Down Seal.

150mm Stainless Steel Flush Bolt

- Radiused ends
- Designed to work exclusively with Flash Seal

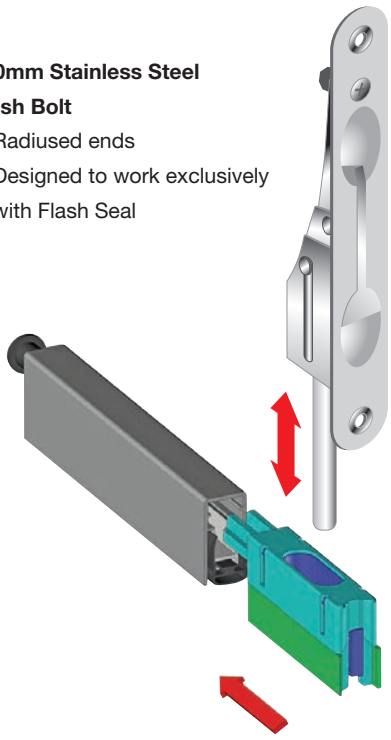

Features and Benefits

- Soft TPV seal (lateral and frontal), for acoustic sealing
- Seal is manually lowered on handle side
- 10 mm maximum drop
- Springs in galvanised steel

Acoustic Performance and Fire Testing

Acoustic testing undertaken in accordance with BS EN ISO 140-3:1995 achieving a rating of up to 35dB Rw

Code	Length	Description	Pack Outers
FS1243	-	Flash extension for Acoustic Plus Drop Down Seal	1
FS1244	150mm	Stainless steel flush bolt radiused ends-suits FS124	1

Trend

Sound Fire Smoke Air DDA Light

Rebated model for timber doors
Acoustically tested achieving up to **39dB Rw**

Features and Benefits

- Maximum trimming Length: 200mm
- Removable seal to aid in fitting/replacement
- 14mm maximum drop
- Tested to 200,000 cycles
- Self-directing reinforced plunger
- Therm type high quality co-extruded, self-extinguishing seal, in aluminium body

Acoustic Performance and Fire Testing

Acoustic testing undertaken in accordance with BS EN ISO 10140-1 & BS EN ISO 10140-2 achieving a rating of 39dB

Fire tested to BS EN 1634-1 & BS476: Part 22 to 60 minutes

Smoke tested to BS EN 1634-3: 2004

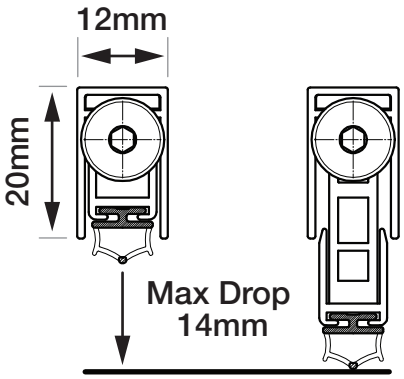

Code	Length	Description	Maximum Trimmed Length	Pack Outers
FS1315	326mm	Trend 39dB Drop Down Seal	276mm	1
FS1316	426mm	Trend 39dB Drop Down Seal	291mm	1
FS1317	526mm	Trend 39dB Drop Down Seal	326mm	1
FS1318	626mm	Trend 39dB Drop Down Seal	426mm	1
FS1319	726mm	Trend 39dB Drop Down Seal	526mm	1
FS1320	826mm	Trend 39dB Drop Down Seal	626mm	1
FS1321	926mm	Trend 39dB Drop Down Seal	726mm	1
FS1322	1026mm	Trend 39dB Drop Down Seal	826mm	1
FS1323	1126mm	Trend 39dB Drop Down Seal	926mm	1
FS1324	1226mm	Trend 39dB Drop Down Seal	1026mm	1

Superior 60

Sound Fire Smoke Air DDA Light

Rebated model for timber doors
Acoustically tested achieving up to **48dB Rw**

Features and Benefits

- Maximum trimming length: 150mm
- 17mm maximum drop
- Tested to 200,000 cycles
- Extractable squared nylon plunger with return spring
- Therm type high quality co-extruded, self-extinguishing seal, in aluminium body

Acoustic Performance and Fire Testing

Acoustic testing undertaken in accordance with BS EN ISO 10140-1 & BS EN ISO 10140-2 achieving a rating of 48dB

Fire tested to BS EN 1634-1 & BS476: Part 22 to 60 minutes

Smoke tested to BS EN 1634-3: 2004

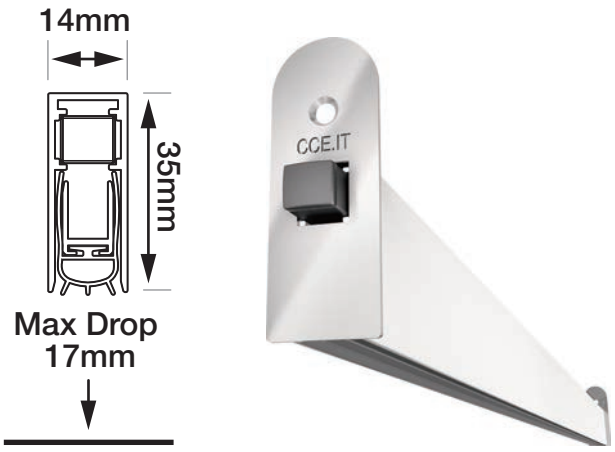

Code	Length	Description	Maximum Trimmed Length	Pack Outers
FS1330	326mm	Superior 60 48dB Drop Down Seal	276mm	1
FS1331	426mm	Superior 60 48dB Drop Down Seal	295mm	1
FS1332	526mm	Superior 60 48dB Drop Down Seal	376mm	1
FS1333	626mm	Superior 60 48dB Drop Down Seal	476mm	1
FS1334	726mm	Superior 60 48dB Drop Down Seal	576mm	1
FS1335	826mm	Superior 60 48dB Drop Down Seal	676mm	1
FS1336	926mm	Superior 60 48dB Drop Down Seal	776mm	1
FS1337	1026mm	Superior 60 48dB Drop Down Seal	876mm	1
FS1338	1126mm	Superior 60 48dB Drop Down Seal	976mm	1
FS1339	1226mm	Superior 60 48dB Drop Down Seal	1076mm	1

Applique 37

Sound Fire Smoke Air DDA Light

Surface mounted for retro fitting on timber door sets
Acoustically tested achieving up to **37dB Rw**

Features and Benefits

- Screw fix (screws supplied)
- Can be fitted to inside (lock side using bumper provided), or outside of the door (non lock side)
- Satin Anodised Aluminium finish - Also available in White, Brown and Gold anodised to special order
- Seal drops on hinge side before lock side
- 14 mm maximum drop
- Galvanized steel flat springs and reinforced actuators
- 4-fin high quality 'V' zero class PVC rubber seal, self extinguishing

Acoustic Performance and Fire Testing

Acoustic testing undertaken in accordance with BS EN ISO 140-3:1995 achieving a rating of up to 37dB Rw

Fire tested to BS476: Part 20/22: 1987 to 60 minutes

Smoke tested to BS EN 1634-3: 2004

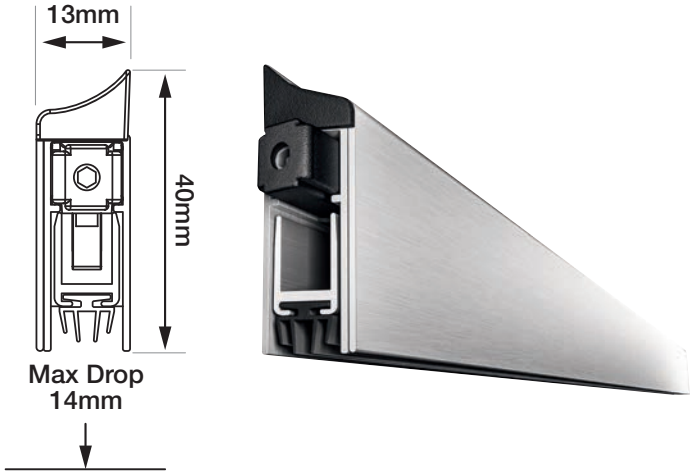

Code	Length	Description	Finish	Maximum Trimmed Length	Pack Outers
FS1228	330mm	Applique 37dB Drop Down Seal	Satin Anodised Aluminium	310mm	5
FS1229	430mm	Applique 37dB Drop Down Seal	Satin Anodised Aluminium	310mm	5
FS1230	530mm	Applique 37dB Drop Down Seal	Satin Anodised Aluminium	380mm	5
FS1231	630mm	Applique 37dB Drop Down Seal	Satin Anodised Aluminium	480mm	5
FS1232	730mm	Applique 37dB Drop Down Seal	Satin Anodised Aluminium	580mm	5
FS1233	830mm	Applique 37dB Drop Down Seal	Satin Anodised Aluminium	680mm	5
FS1234	930mm	Applique 37dB Drop Down Seal	Satin Anodised Aluminium	780mm	5
FS1235	1030mm	Applique 37dB Drop Down Seal	Satin Anodised Aluminium	880mm	5
FS1236	1130mm	Applique 37dB Drop Down Seal	Satin Anodised Aluminium	980mm	5
FS1237	1230mm	Applique 37dB Drop Down Seal	Satin Anodised Aluminium	1080mm	5

Special sizes available to order: 1330mm-1430mm-1530mm-1630mm-1730mm-1830mm

Coral

Sound Smoke Air Light

Application: Wooden door assemblies
Acoustically tested achieving up to **35dB Rw**

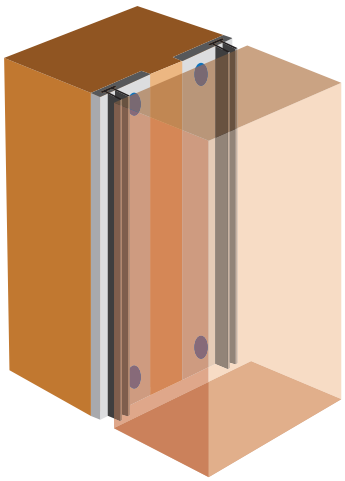

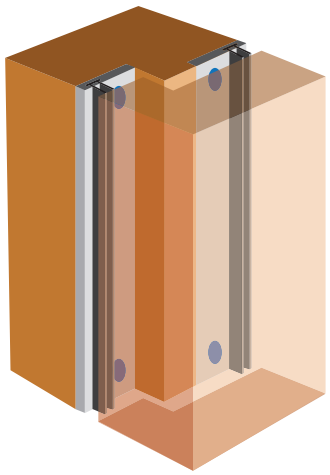

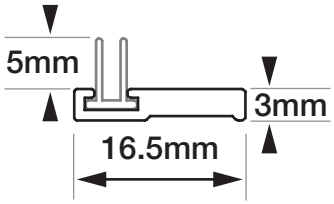

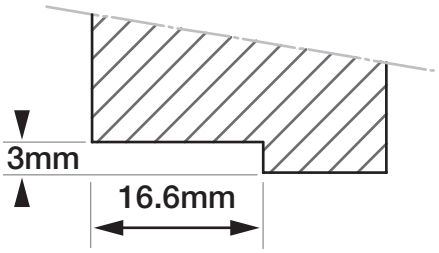

Acoustic meeting stile for double action door leaves.
Can be flush fitted or rebated.

Features and Benefits

- Min / Max Gap: 3 – 8 mm
- Satin Anodised Aluminium finish
- Screw fix (screws supplied)
- PVC seal for acoustic performance

Acoustic Performance

Acoustic testing undertaken in accordance with BS EN ISO 140-3:1995 achieving a rating of up to 35dB Rw

Code	Length	Description	Colour	Pack Outers
FS1239	2.1mtr	Meeting Stile Seal - Double action	Satin Anodised Aluminium	1
FS1241	2.5mtr	Meeting Stile Seal - Double action	Satin Anodised Aluminium	1

Lamal

Sound Smoke Air Light

Application: Wooden door assemblies
Acoustically tested achieving up to **35dB Rw**

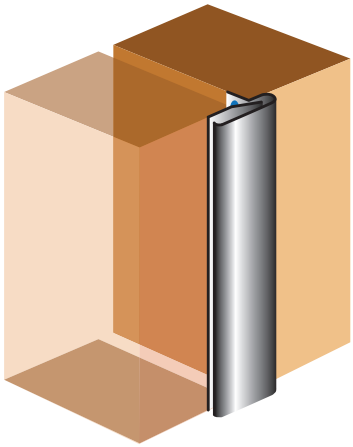

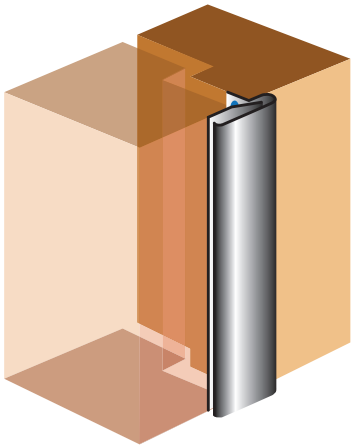

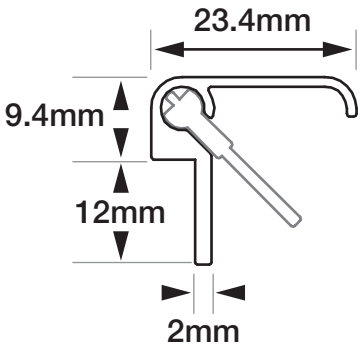

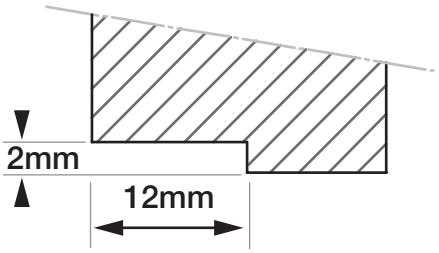

Acoustic meeting stile for double action door leaves.
Can be flush fitted or rebated.

Features and Benefits

- Min / Max Gap: 3 – 8 mm
- Satin Anodised Aluminium finish
- Screw fix (screws supplied)
- PVC seal for acoustic performance

Acoustic Performance

Acoustic testing undertaken in accordance with BS EN ISO 140-3:1995 achieving a rating of up to 35dB Rw

Code	Length	Description	Colour	Pack Outers
FS1238	2.1mtr	Meeting Stile Seal - Single action	Satin Anodised Aluminium	1
FS1240	2.5mtr	Meeting Stile Seal - Single action	Satin Anodised Aluminium	1

Perimeter Seals

Sound Smoke Air Light

Corner Seal

Acoustically tested achieving up to **39dB Rw**

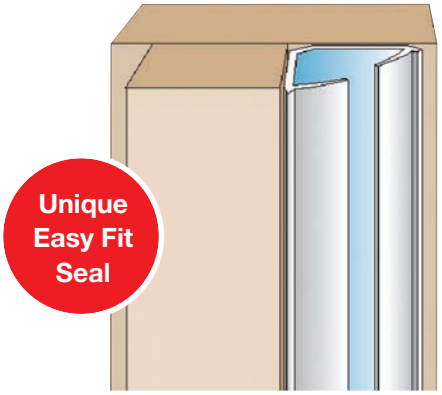

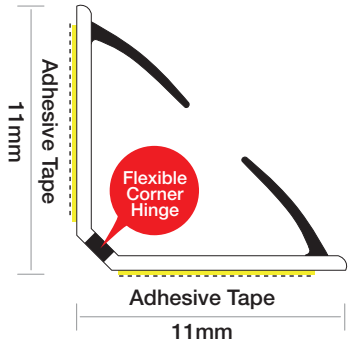

Background

All doors need a gap between the perimeter of the door and the door frame to allow the door to function correctly. These gaps allow doors to be opened and closed easily and accommodate any expansion/movement within the building. Consequently these gaps also allow sound, smoke, fire, heat (hot & cold) etc. to permeate through the doorset assembly.

Approved Doc E

The acoustic requirements of doorsets are set out in the above document, and specifies what must be achieved in order to be compliant within the building regulations. The Firestop range of Acoustic Corner Seals have been specially designed to provide an effective barrier to seal perimeter gaps in pedestrian doorset assemblies, achieving a noise reduction of Rw39dB (tested). The fitting of a Acoustic Perimeter Seal will help to dramatically improve the effectiveness of the doorset assembly, in terms of noise permeatation, smoke and air movement through the perimeter gap.

Product Features

- Unique easy fit product
- Achieved 39dB reduction unaided
- Eliminates the need for a separate smoke seal
- Engineered size to avoid over lapping door ironmongery
- Supplied with a high performance self adhesive backing
- Excellent compression and deflection performance
- Reduced door closing force due to a low co-efficient material used in integral fins

Product Range

Available in packs of 40 x 2.1m lengths in the following colours:

Longer lengths to suit larger leaf sizes are available to order.

Acoustic Performance and Fire Testing

Acoustic testing undertaken in accordance with BS EN ISO 140-3:1995 achieving a rating of up to 37dB Rw

Fire tested to BS476: Part 20/22: 1987 to 60 minute

Smoke tested to BS EN 1634-3: 2004

Code	Length	Description	Colour	Pack Outers
FS1404	2.1mtr	Corner Seal (39dB)	White	40
FS1405	2.1mtr	Corner Seal (39dB)	Brown	40
FS1407	2.1mtr	Corner Seal (39dB)	Black	40

Perimeter Seals

Sound Smoke Air Light

Corner Seal

Acoustically tested achieving up to **39dB Rw**

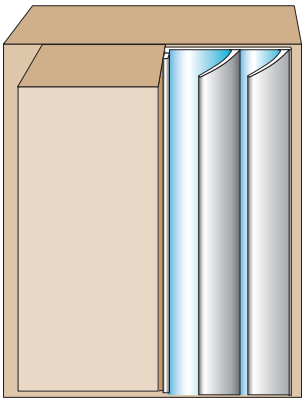

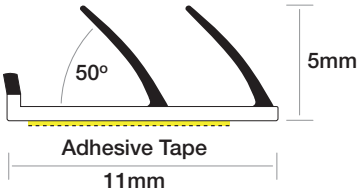

Background

All doors need a gap between the perimeter of the door and the door frame to allow the door to function correctly. These gaps allow doors to be opened and closed easily and accommodate any expansion/movement within the building. Consequently these gaps also allow sound, smoke, fire, heat (hot & cold) etc. to permeate through the doorset assembly.

Approved Doc E

The acoustic requirements of doorsets are set out in the above document, and specifies what must be achieved in order to be compliant within the building regulations. The Firestop range of Acoustic Twin Fin Seals have been specially designed to provide an effective barrier to seal perimeter gaps in pedestrian doorset assemblies, achieving a noise reduction of Rw35dB. The fitting of a Acoustic perimeter Seal will help to dramatically improve the effectiveness of the doorset assembly, in terms of noise permeatation, smoke and air movement through the perimeter gap.

Product Features

- Compact designed seal ideal for hygiene and clean rooms
- Reduces door binding
- No need to fit separate smoke seals
- Engineered size to avoid over lapping door ironmongery
- Supplied with a high performance self adhesive backing
- Excellent compression and deflection performance
- Reduced door closing force due to a low co-efficient material used in integral fins

Product Range

Available in packs of 70 x 2.1m lengths in the following colours:

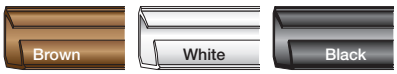

Longer lengths to suit larger leaf sizes are available to order.

Acoustic Performance and Fire Testing

Acoustic testing undertaken in accordance with BS EN ISO 140-3:1995 achieving a rating of up to 37dB Rw

Fire tested to BS476: Part 20/22: 1987 to 60 minutes

Smoke tested to BS EN 1634-3: 2004

Code	Length	Description	Colour	Pack Outers
FS1400	2.1mtr	Twin Blade Seal (35dB)	White	70
FS1401	2.1mtr	Twin Blade Seal (35dB)	Brown	70
FS1411	2.1mtr	Twin Blade Seal (35dB)	Black	70

FIRE STOP

PROTECTING LIFE & PROPERTY

Firestop Manufacturing Limited
4 - 6 Wyvern Buildings
Grove Trading Estate
Dorchester
Dorset DT1 1ST

t 01305 257 428 e sales@firestopltd.co.uk w firestopltd.co.uk